OLTENS
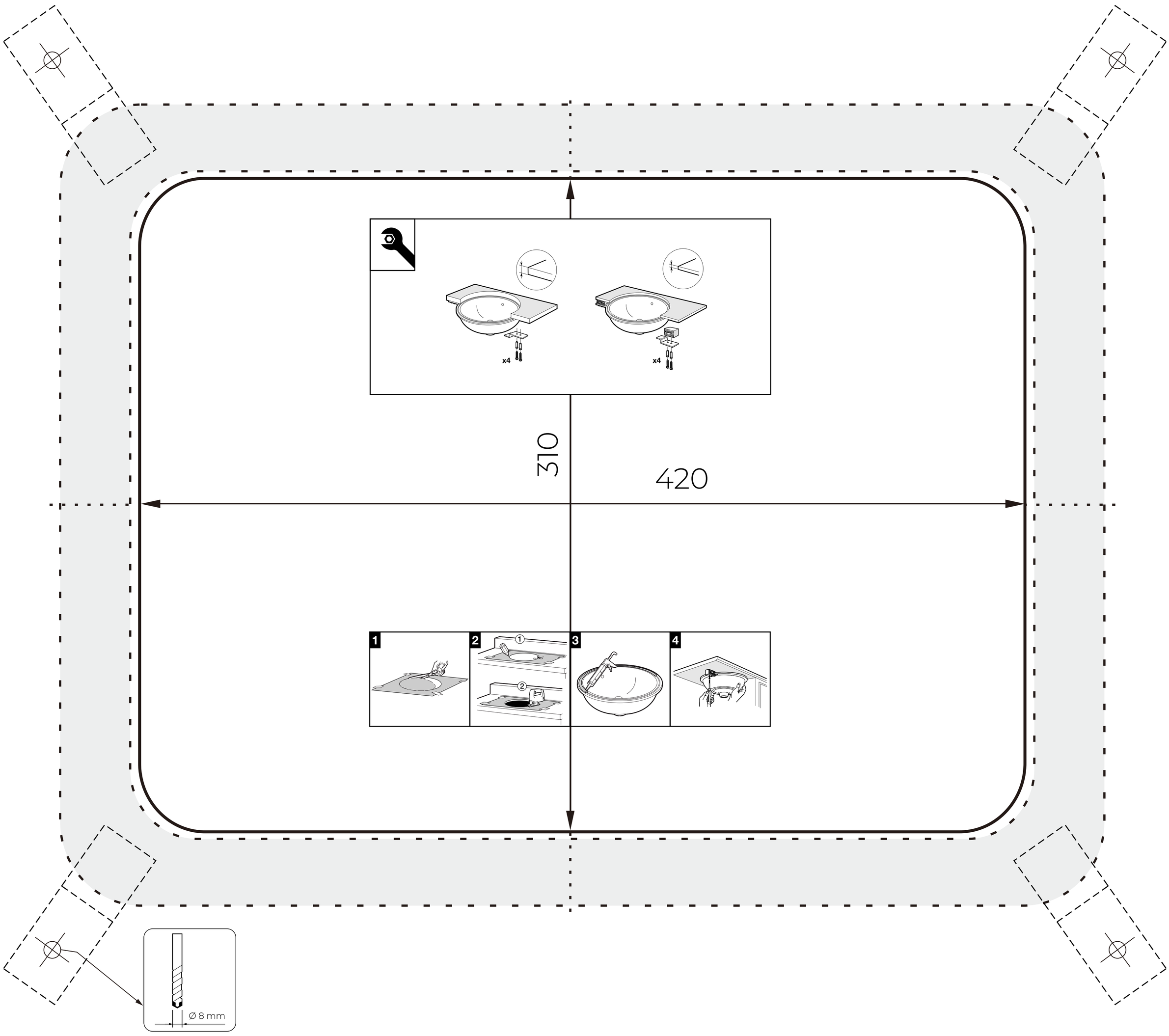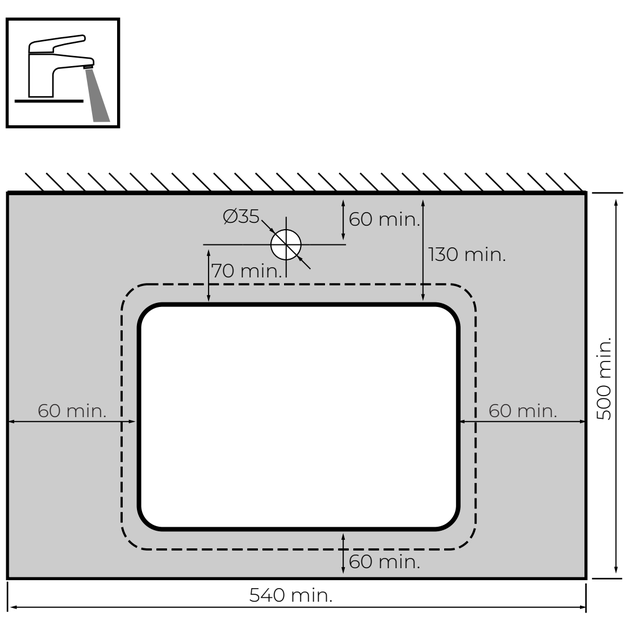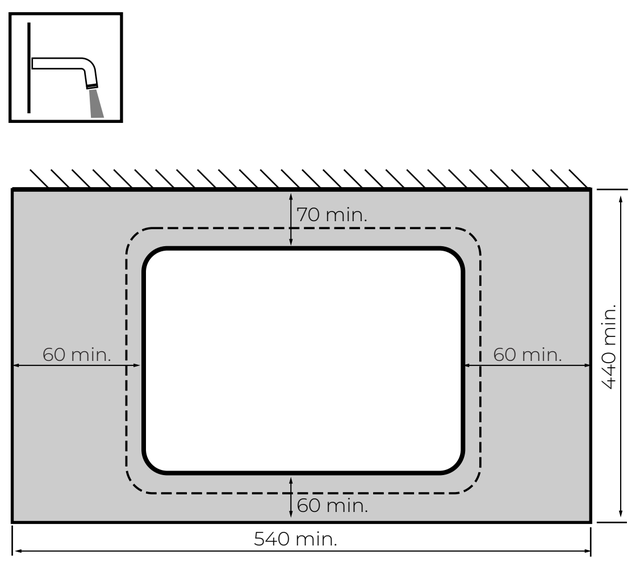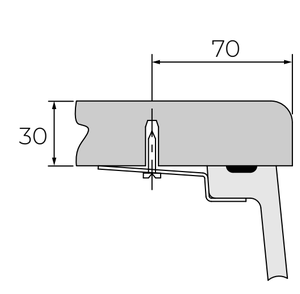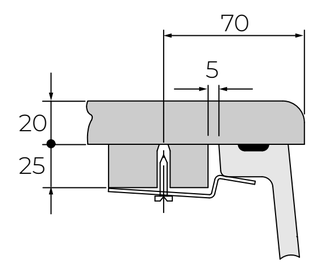
MONTAGESCHABLONE
40106000/40606000